Ethernet1- Motors

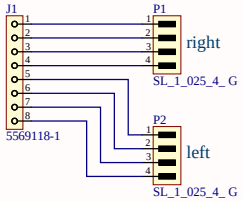

Ethernet2 - Wheel, Touch, 12V

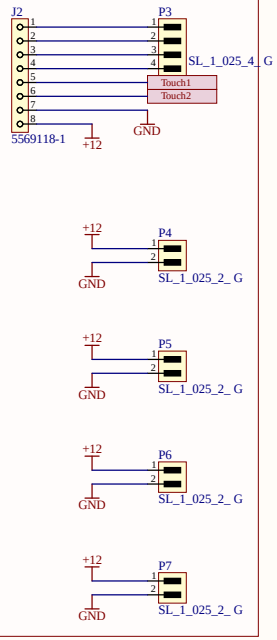

Ethernet3 - Photodiodes, 5V

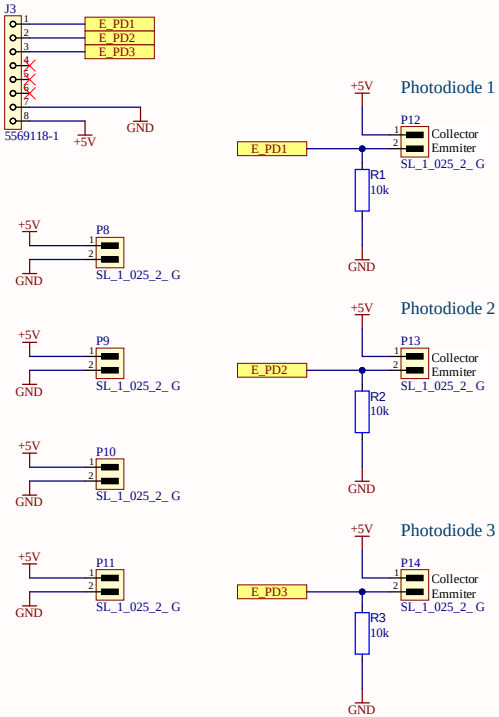

Ethernet4 - Speaker / Trigger

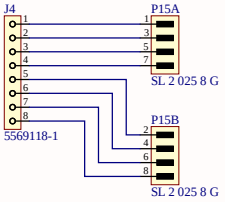

Touch

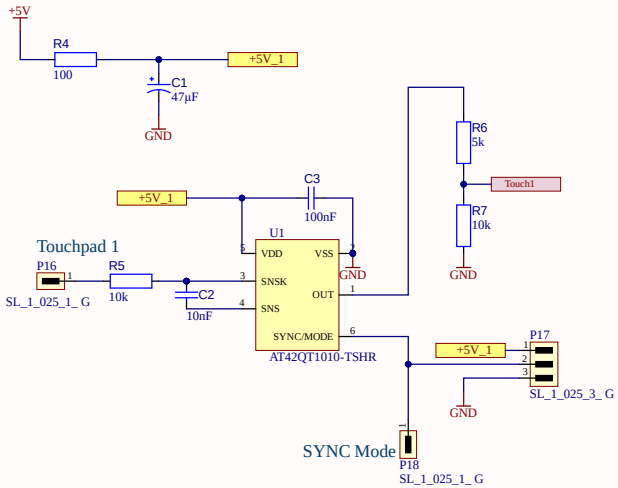

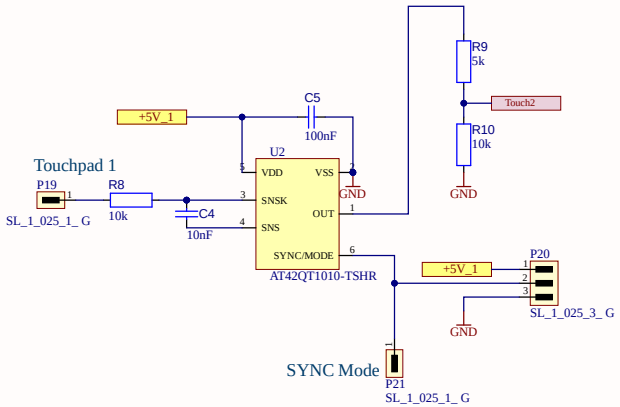

Titel Breakoutboard			JÜLICH Forschungszentrum
PW-Nr. PW8394.	Revision 4	Size A3	Company Forschungszentrum Jülich GmbH Wilhelm-Johnen-Straße 52428 Jülich
Drawn by D. Hellenbrandt			
Date 23.02.2026 Time 08:29:47	Sheet 1 of 1		Institut IBI-TAE
File C:\Users\d.hellenbrandt\Scribo\Freigaben\Bpod Verhaltenssystem\Breakout_v4 (23.02.2026 07:45)\Breakout_v4.SchDoc			

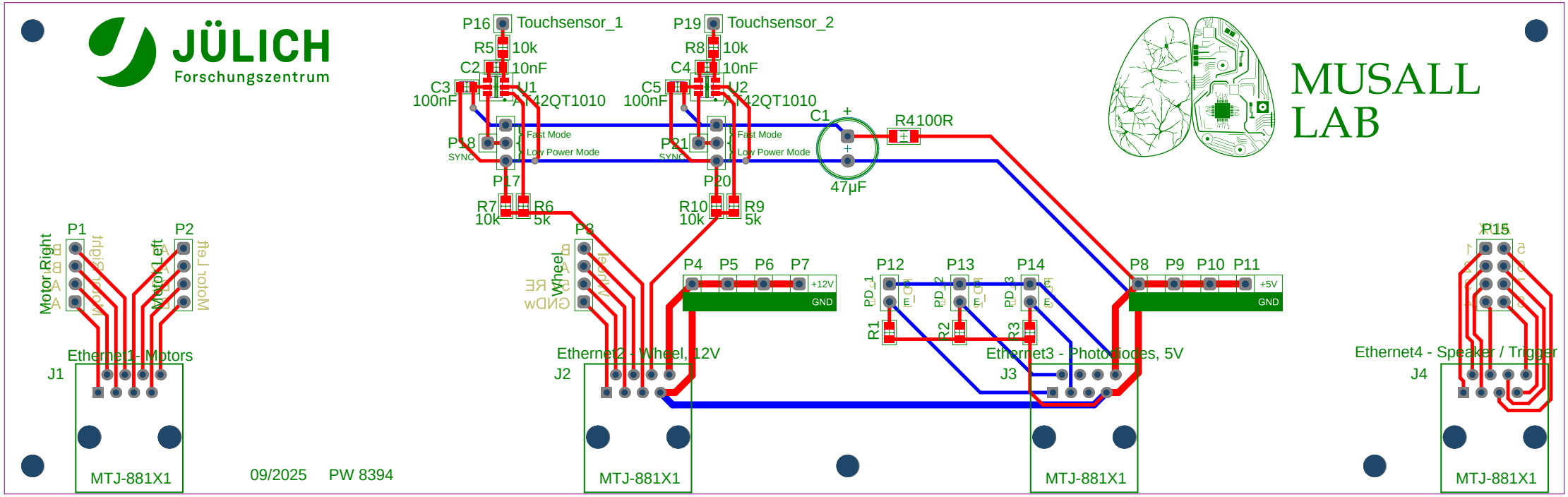
JÜLICH
Forschungszentrum
MUSALL LAB
P16 Touchsensor_1
P19 Touchsensor_2
R5 10k
R8 10k
C2 10nF
C4 10nF
C3 100nF
C5 100nF
U1 AT42QT1010
U2 AT42QT1010
P18 SYNC
P21 SYNC
Fast Mode
Low Power Mode
P17
P20
R7 10k
R6 5k
R10 10k
R9 5k
C1 47µF
R4 100R
P1
P2
Motor Right
Motor Left
Ethernet1 - Motors
J1
MTJ-881X1
P3
Wheel
Ethernet2 - Wheel, 12V
J2
MTJ-881X1
P4 P5 P6 P7
+12V
GND
P12 P13 P14
PD_1
PD_2
PD_3
R1
R2
R3
Ethernet3 - Photodiodes, 5V
J3
MTJ-881X1
P8 P9 P10 P11
+5V
GND
P15
Ethernet4 - Speaker / Trigger
J4
MTJ-881X1
09/2025
PW 8394